UNIVERSITY OF CAMBRIDGE INTERNATIONAL EXAMINATIONS
General Certificate of Education Advanced Level

CANDIDATE NAME

CENTRE NUMBER

CANDIDATE NUMBER

2809002895

PHYSICS **9702/04**

Paper 4 A2 Structured Questions **October/November 2007**

1 hour 45 minutes

Candidates answer on the Question Paper.

No Additional Materials are required.

READ THESE INSTRUCTIONS FIRST

Write your Centre number, candidate number and name on all the work you hand in.
Write in dark blue or black pen.
You may use a soft pencil for any diagrams, graphs or rough working.
Do not use staples, paper clips, highlighters, glue or correction fluid.
DO **NOT** WRITE IN ANY BARCODES.

Answer **all** questions.
You may lose marks if you do not show your working or if you do not use appropriate units.

At the end of the examination, fasten all your work securely together.
The number of marks is given in brackets [ ] at the end of each question or part question.

For Examiner's Use	
1	
2	
3	
4	
5	
6	
7	
8	
9	
10	
11	
Total	

This document consists of **23** printed pages and **1** blank page.

© UCLES 2007

Data

speed of light in free space,	$c = 3.00 \times 10^{8}\ \text{m s}^{-1}$
permeability of free space,	$\mu_0 = 4\pi \times 10^{-7}\ \text{H m}^{-1}$
permittivity of free space,	$\varepsilon_0 = 8.85 \times 10^{-12}\ \text{F m}^{-1}$
elementary charge,	$e = 1.60 \times 10^{-19}\ \text{C}$
the Planck constant,	$h = 6.63 \times 10^{-34}\ \text{J s}$
unified atomic mass constant,	$u = 1.66 \times 10^{-27}\ \text{kg}$
rest mass of electron,	$m_e = 9.11 \times 10^{-31}\ \text{kg}$
rest mass of proton,	$m_p = 1.67 \times 10^{-27}\ \text{kg}$
molar gas constant,	$R = 8.31\ \text{J K}^{-1}\ \text{mol}^{-1}$
the Avogadro constant,	$N_A = 6.02 \times 10^{23}\ \text{mol}^{-1}$
the Boltzmann constant,	$k = 1.38 \times 10^{-23}\ \text{J K}^{-1}$
gravitational constant,	$G = 6.67 \times 10^{-11}\ \text{N m}^2\ \text{kg}^{-2}$
acceleration of free fall,	$g = 9.81\ \text{m s}^{-2}$

© UCLES 2007

Formulae

uniformly accelerated motion, $s = ut + \frac{1}{2}at^2$
$v^2 = u^2 + 2as$

work done on/by a gas, $W = p\Delta V$

gravitational potential, $\phi = -\frac{Gm}{r}$

hydrostatic pressure, $p = \rho gh$

pressure of an ideal gas, $p = \frac{1}{3}\frac{Nm}{V}<c^2>$

simple harmonic motion, $a = -\omega^2 x$

velocity of particle in s.h.m., $v = v_0 \cos \omega t$
$v = \pm \omega \sqrt{(x_0^2 - x^2)}$

electric potential, $V = \frac{Q}{4\pi\varepsilon_0 r}$

capacitors in series, $1/C = 1/C_1 + 1/C_2 + \ldots$

capacitors in parallel, $C = C_1 + C_2 + \ldots$

energy of charged capacitor, $W = \frac{1}{2}QV$

resistors in series, $R = R_1 + R_2 + \ldots$

resistors in parallel, $1/R = 1/R_1 + 1/R_2 + \ldots$

alternating current/voltage, $x = x_0 \sin \omega t$

radioactive decay, $x = x_0 \exp(-\lambda t)$

decay constant, $\lambda = \frac{0.693}{t_{\frac{1}{2}}}$

© UCLES 2007

Section A

Answer **all** the questions in the spaces provided.

1 **(a)** Explain

(i) what is meant by a *radian*,

.....

.....

.....[2]

(ii) why one complete revolution is equivalent to an angular displacement of 2π rad.

.....

.....[1]

(b) An elastic cord has an unextended length of 13.0 cm. One end of the cord is attached to a fixed point C. A small mass of weight 5.0 N is hung from the free end of the cord. The cord extends to a length of 14.8 cm, as shown in Fig. 1.1.

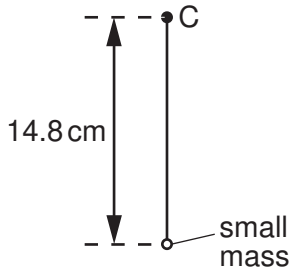

Fig. 1.1

The cord and mass are now made to rotate at constant angular speed ω in a vertical plane about point C. When the cord is vertical and above C, its length is the unextended length of 13.0 cm, as shown in Fig. 1.2.

© UCLES 2007

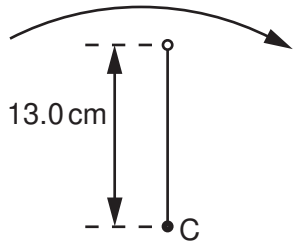

Fig. 1.2

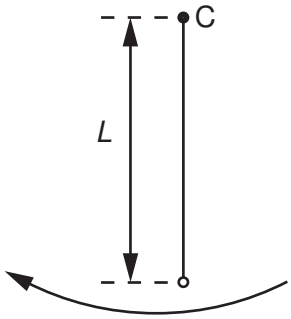

Fig. 1.3

(i) Show that the angular speed ω of the cord and mass is 8.7 rad s^{-1}.

[2]

(ii) The cord and mass rotate so that the cord is vertically below C, as shown in Fig. 1.3.

Calculate the length L of the cord, assuming it obeys Hooke's law.

L = ... cm [4]

2 **(a)** An amount of 1.00 mol of Helium-4 gas is contained in a cylinder at a pressure of 1.02×10^5 Pa and a temperature of 27 °C.

(i) Calculate the volume of gas in the cylinder.

volume = ... m^3 [2]

(ii) Hence show that the average separation of gas atoms in the cylinder is approximately 3.4×10^{-9} m.

[2]

(b) Calculate

(i) the gravitational force between two Helium-4 atoms that are separated by a distance of 3.4×10^{-9} m,

force = ... N [3]

© UCLES 2007

(ii) the ratio

$$\frac{\text{weight of a Helium-4 atom}}{\text{gravitational force between two Helium-4 atoms with separation } 3.4 \times 10^{-9}\,\text{m}}.$$

ratio = ...[2]

(c) Comment on your answer to **(b)(ii)** with reference to one of the assumptions of the kinetic theory of gases.

.....

.....

.....[2]

3 A spring is hung from a fixed point. A mass of 130 g is hung from the free end of the spring, as shown in Fig. 3.1.

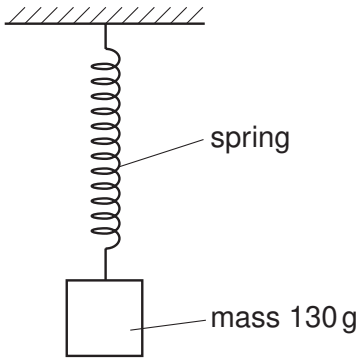

Fig. 3.1

The mass is pulled downwards from its equilibrium position through a small distance *d* and is released. The mass undergoes simple harmonic motion.
Fig. 3.2 shows the variation with displacement *x* from the equilibrium position of the kinetic energy of the mass.

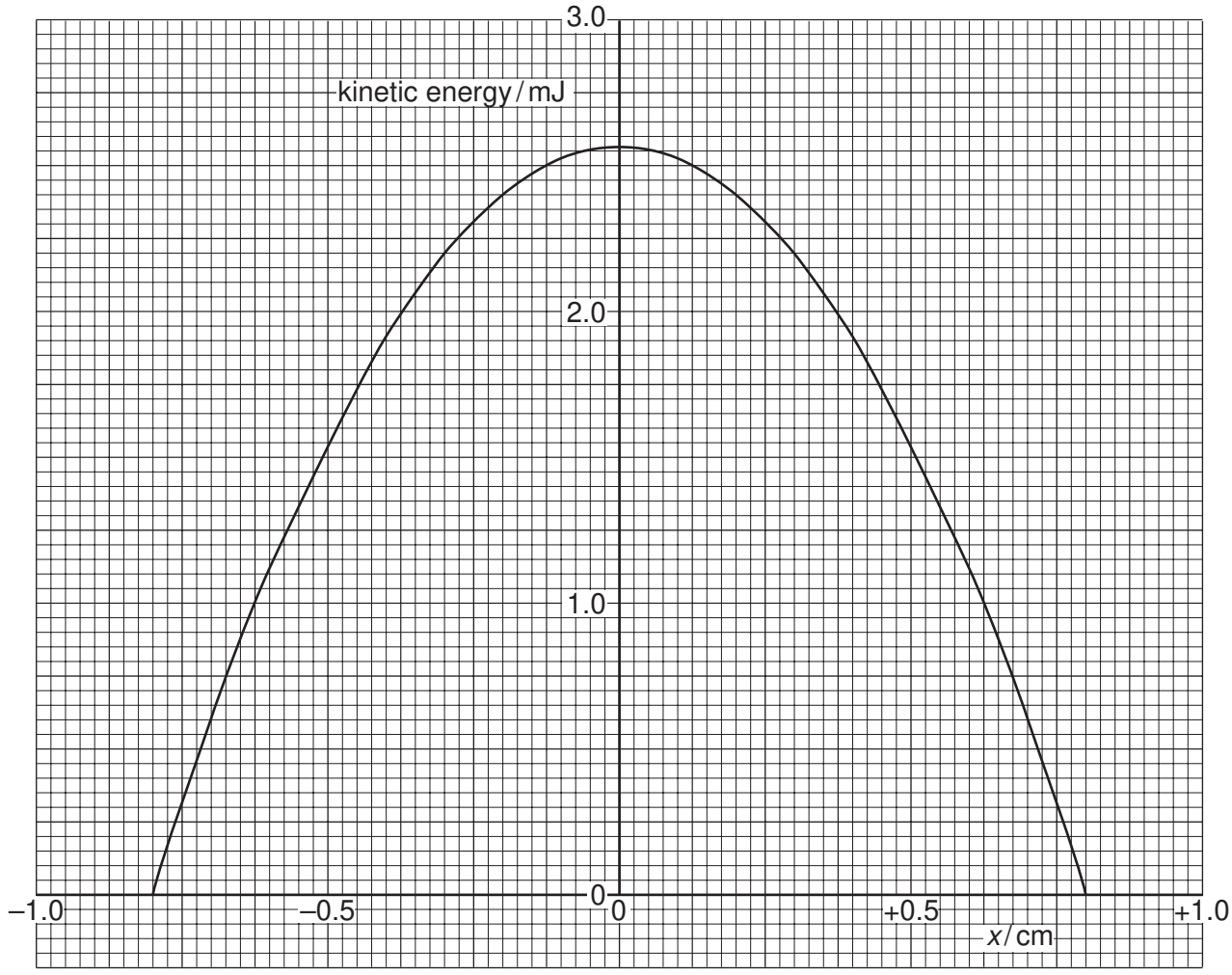

Fig. 3.2

© UCLES 2007

(a) Use Fig. 3.2 to

(i) determine the distance *d* through which the mass was displaced initially,

d = ... cm [1]

(ii) show that the frequency of oscillation of the mass is approximately 4.0 Hz.

[6]

(b) **(i)** On Fig. 3.2, draw a line to represent the total energy of the oscillating mass. [1]

(ii) After many oscillations, damping reduces the total energy of the mass to 1.0 mJ. For the oscillations with reduced energy,

1. state the frequency,

frequency = ...Hz

2. using the graph, or otherwise, state the amplitude.

amplitude = ... cm [2]

4 A small charged metal sphere is situated in an earthed metal box. Fig. 4.1 illustrates the electric field between the sphere and the metal box.

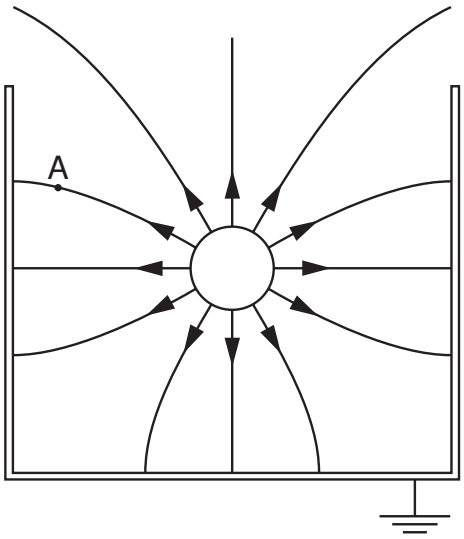

Fig. 4.1

(a) By reference to Fig. 4.1, state and explain

(i) whether the sphere is positively or negatively charged,

.....

.....

.....[2]

(ii) why it appears as if the charge on the sphere is concentrated at the centre of the sphere.

.....

.....[1]

(b) On Fig. 4.1, draw an arrow to show the direction of the force on a stationary electron situated at point A. [2]

© UCLES 2007

(c) The radius r of the sphere is 2.4 cm. The magnitude of the charge q on the sphere is 0.76 nC.

(i) Use the expression

$$V = \frac{Q}{4\pi\varepsilon_0 r}$$

to calculate a value for the magnitude of the potential V at the surface of the sphere.

V = ...V [2]

(ii) State the sign of the charge induced on the inside of the metal box. Hence explain whether the actual magnitude of the potential will be greater or smaller than the value calculated in **(i)**.

.....

.....

.....

.....[3]

(d) A lead sphere is placed in a lead box in free space, in a similar arrangement to that shown in Fig. 4.1. Explain why it is **not** possible for the gravitational field to have a similar shape to that of the electric field.

.....

.....

.....[1]

5 **(a)** State one function of capacitors in simple circuits.

.....

.....[1]

(b) A capacitor is charged to a potential difference of 15V and then connected in series with a switch, a resistor of resistance 12kΩ and a sensitive ammeter, as shown in Fig. 5.1.

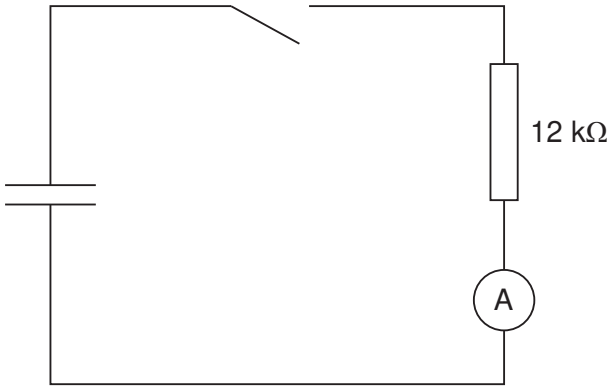

Fig. 5.1

The switch is closed and the variation with time t of the current I in the circuit is shown in Fig. 5.2.

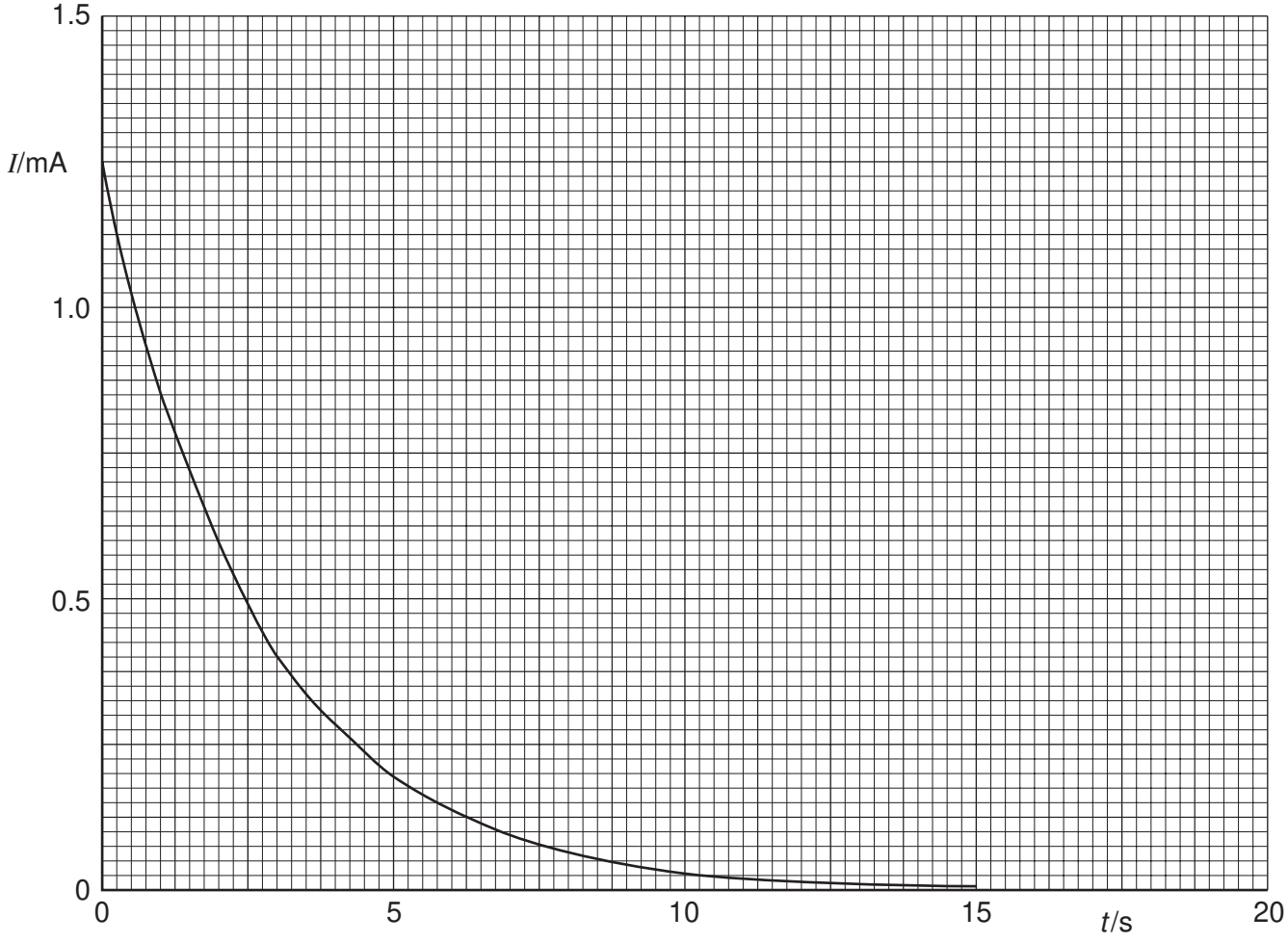

Fig. 5.2

© UCLES 2007

(i) State the relation between the current in a circuit and the charge that passes a point in the circuit.

.....

.....[1]

(ii) The area below the graph line of Fig. 5.2 represents charge.
Use Fig. 5.2 to determine the initial charge stored in the capacitor.

charge = ... μC [4]

(iii) Initially, the potential difference across the capacitor was 15 V.
Calculate the capacitance of the capacitor.

capacitance = ... μF [2]

(c) The capacitor in **(b)** discharges one half of its initial energy. Calculate the new potential difference across the capacitor.

potential difference = ...V [3]

6 **(a)** A straight conductor carrying a current I is at an angle θ to a uniform magnetic field of flux density B, as shown in Fig. 6.1.

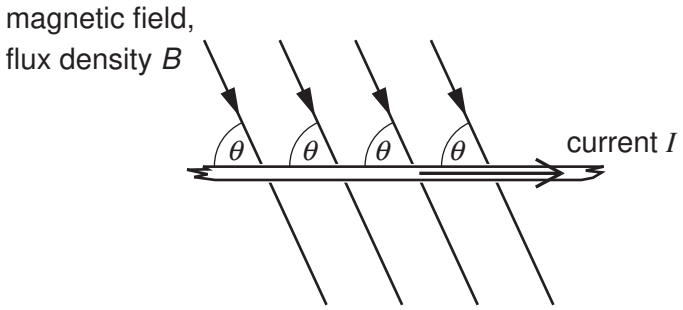

Fig. 6.1

The conductor and the magnetic field are both in the plane of the paper. State

(i) an expression for the force per unit length acting on the conductor due to the magnetic field,

force per unit length =.....[1]

(ii) the direction of the force on the conductor.

.....[1]

© UCLES 2007

(b) A coil of wire consisting of two loops is suspended from a fixed point as shown in Fig. 6.2.

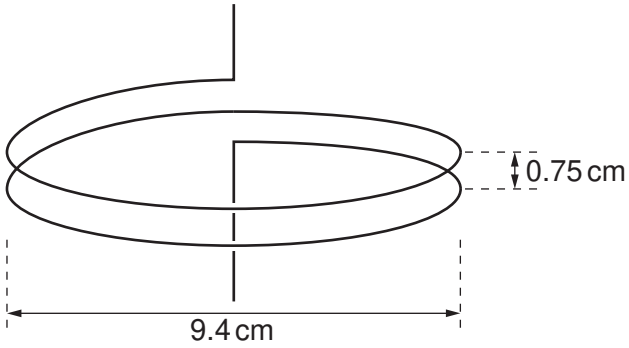

Fig. 6.2

Each loop of wire has diameter 9.4 cm and the separation of the loops is 0.75 cm.
The coil is connected into a circuit such that the lower end of the coil is free to move.

(i) Explain why, when a current is switched on in the coil, the separation of the loops of the coil decreases.

.....

.....

.....

.....

.....[4]

(ii) Each loop of the coil may be considered as being a long straight wire.
In SI units, the magnetic flux density B at a distance x from a long straight wire carrying a current I is given by the expression

$$B = 2.0 \times 10^{-7} \frac{I}{x}.$$

When the current in the coil is switched on, a mass of 0.26 g is hung from the free end of the coil in order to return the loops of the coil to their original separation.
Calculate the current in the coil.

current = ...A [4]

7 **(a)** Explain what is meant by the *binding energy* of a nucleus.

.....

.....[1]

(b) Fig. 7.1 shows the variation with nucleon number (mass number) A of the binding energy per nucleon E_B of nuclei.

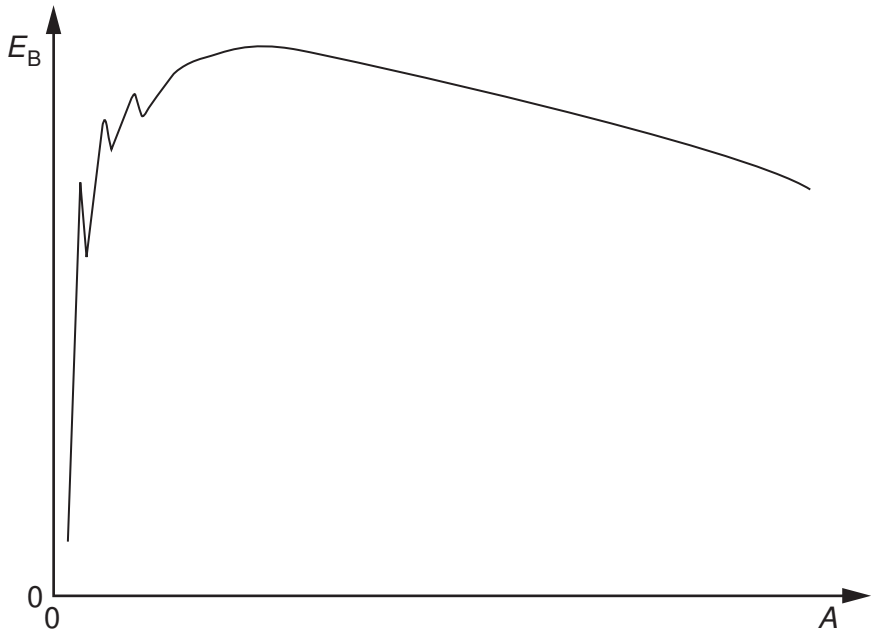

Fig. 7.1

One particular fission reaction may be represented by the nuclear equation

$$^{235}_{92}\text{U} + {}^{1}_{0}\text{n} \rightarrow {}^{141}_{56}\text{Ba} + {}^{92}_{36}\text{Kr} + 3{}^{1}_{0}\text{n}.$$

(i) On Fig. 7.1, label the approximate positions of

1. the uranium ($^{235}_{92}$U) nucleus with the symbol U,

2. the barium ($^{141}_{56}$Ba) nucleus with the symbol Ba,

3. the krypton ($^{92}_{36}$Kr) nucleus with the symbol Kr. [2]

(ii) The neutron that is absorbed by the uranium nucleus has very little kinetic energy. Explain why this fission reaction is energetically possible.

.....

.....

.....[2]

© UCLES 2007

(c) Barium-141 has a half-life of 18 minutes. The half-life of Krypton-92 is 3.0 s.
In the fission reaction of a mass of Uranium-235, equal numbers of barium and krypton nuclei are produced.
Estimate the time taken after the fission of the sample of uranium for the ratio

$$\frac{\text{number of Barium-141 nuclei}}{\text{number of Krypton-92 nuclei}}$$

to be approximately equal to 8.

time = ... s [3]

Section B

Answer **all** the questions in the spaces provided.

8 **(a)** Fig. 8.1 shows a circuit incorporating an ideal operational amplifier (op-amp).

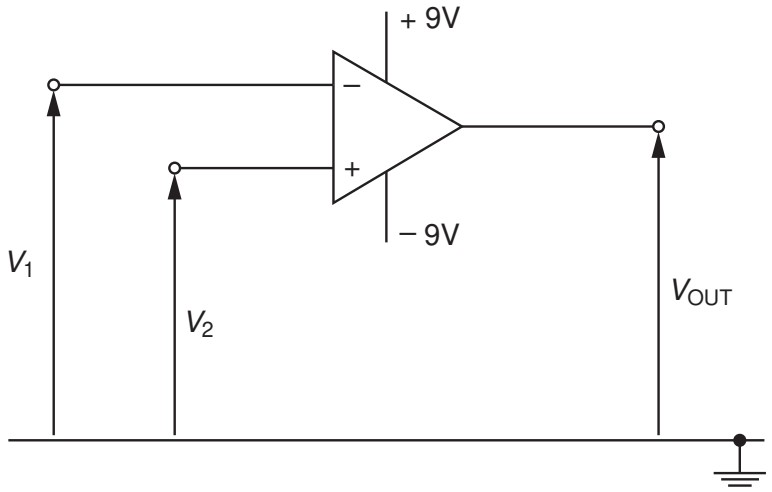

Fig. 8.1

The voltages applied to the inverting and the non-inverting inputs are V_1 and V_2 respectively.

State the value of the output voltage V_{OUT} when

(i) $V_1 > V_2$,

V_{OUT} = ... V

(ii) $V_1 < V_2$.

V_{OUT} = ... V
[1]

(b) The circuit of Fig. 8.2 is used to monitor the input voltage V_{IN}.

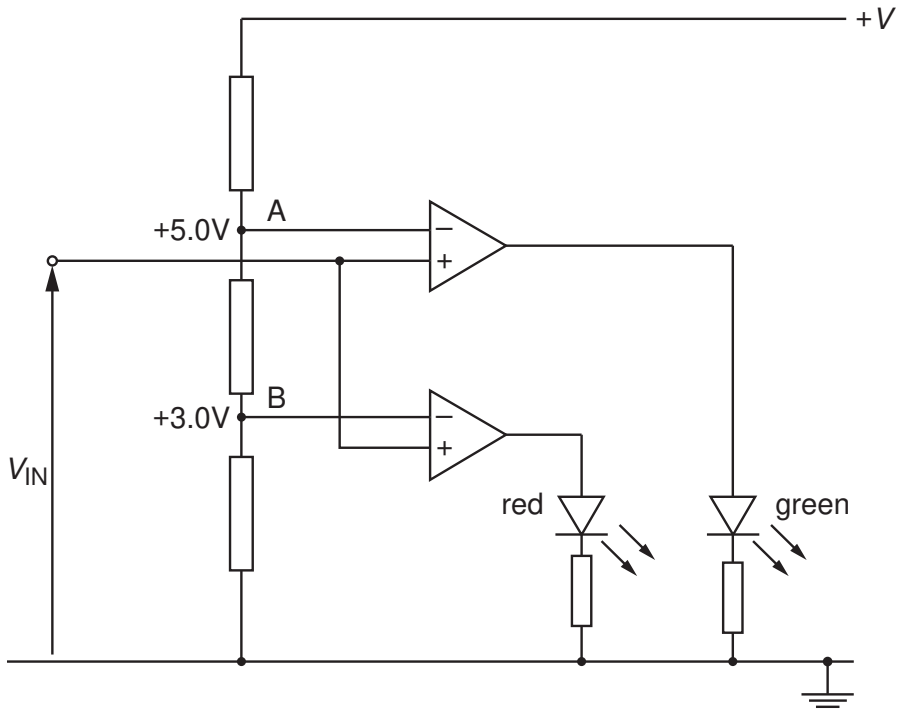

Fig. 8.2

At point A, a potential of 5.0V is maintained. At point B, a potential of 3.0V is maintained.

Complete Fig. 8.3 by indicating with a tick (✓) the light-emitting diodes (LEDs) that are conducting for the input voltages V_{IN} shown. Also, mark with a cross (✘) those LEDs that are not conducting.

V_{IN} / V	red LED	green LED
+2.0		
+4.0		
+6.0		

[3]

Fig. 8.3

(c) The input voltage V_{IN} in **(b)** is provided by a sensor circuit.

(i) Complete Fig. 8.4 to show a sensor circuit that will provide a voltage output that increases as the temperature of the sensor decreases. Show clearly the output connections from the circuit. [2]

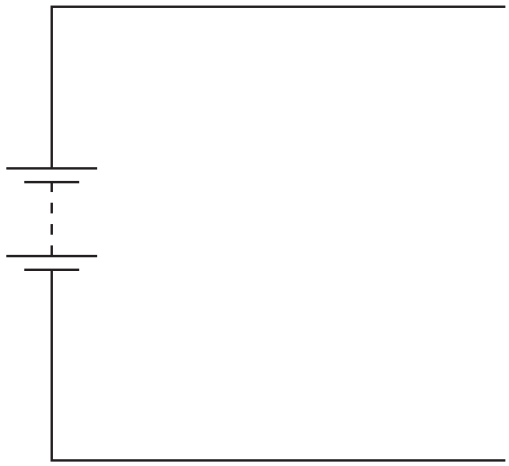

Fig. 8.4

(ii) Explain the operation of the sensor circuit.

.....

.....

.....

.....

.....

.....[3]

© UCLES 2007

9 **(a)** State what is meant by *acoustic impedance*.

.....

.....[1]

(b) Explain why acoustic impedance is important when considering reflection of ultrasound at the boundary between two media.

.....

.....

.....[2]

(c) Explain the principles behind the use of ultrasound to obtain diagnostic information about structures within the body.

.....

.....

.....

.....

.....

.....

.....

.....[5]

10 Fig. 10.1 shows the variation with frequency f of the power P of a radio signal.

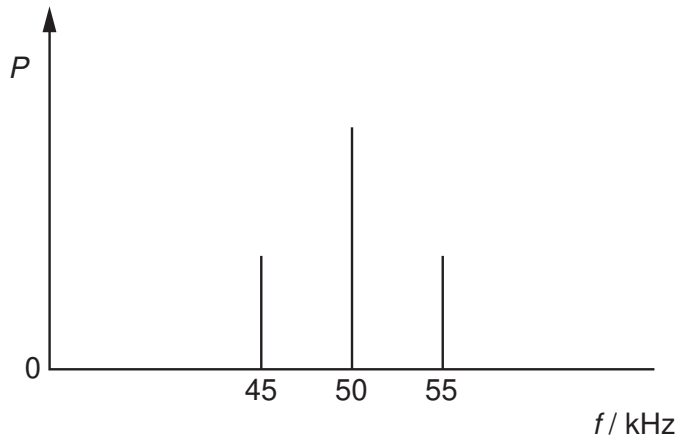

Fig. 10.1

(a) State the name of

(i) the type of modulation of this radio signal,

.....[1]

(ii) the component of frequency 50 kHz,

.....[1]

(iii) the components of frequencies 45 kHz and 55 kHz.

.....[1]

(b) State the bandwidth of the radio signal.

bandwidth = ...kHz [1]

(c) On the axes of Fig. 10.2, sketch a graph to show the variation with time t of the signal voltage of Fig. 10.1.

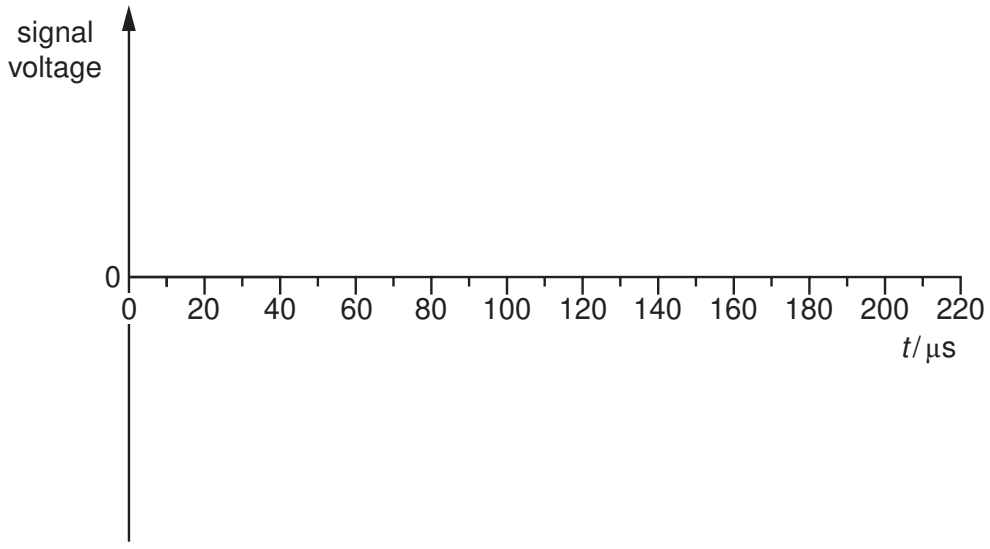

[3]

Fig. 10.2

© UCLES 2007

11 In a cellular phone network, a country is divided into a number of cells, each with its own base station.
Fig. 11.1 shows a number of these base stations and their connection to a cellular exchange.

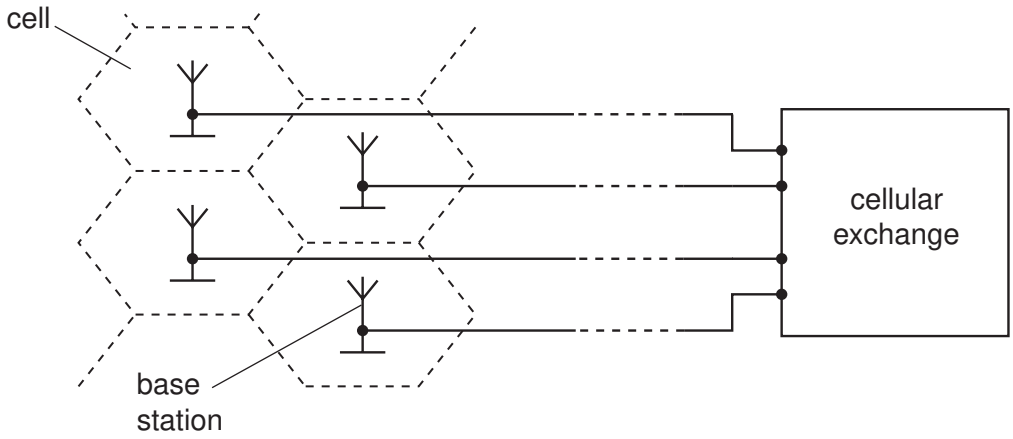

Fig. 11.1

(a) Suggest and explain why the country is divided into a number of cells.

.....

.....

.....

.....[2]

(b) Outline what happens at the base station and the cellular exchange when a mobile phone handset is switched on, before a call is made.

.....

.....

.....

.....

.....

.....

.....[4]

© UCLES 2007

BLANK PAGE

Permission to reproduce items where third-party owned material protected by copyright is included has been sought and cleared where possible. Every reasonable effort has been made by the publisher (UCLES) to trace copyright holders, but if any items requiring clearance have unwittingly been included, the publisher will be pleased to make amends at the earliest possible opportunity.

University of Cambridge International Examinations is part of the Cambridge Assessment Group. Cambridge Assessment is the brand name of University of Cambridge Local Examinations Syndicate (UCLES), which is itself a department of the University of Cambridge.